UNCLASSIFIED

AD NUMBER
AD334879
CLASSIFICATION CHANGES
TO: **unclassified**
FROM: **confidential**
LIMITATION CHANGES
TO: **Approved for public release; distribution is unlimited.**
FROM: **Controlling Organization: British Embassy, 3100 Massachusetts Avenue, NW, Washington, DC 20008.**
AUTHORITY
DSTL, AVIA 37/1257, 11 Dec 2008; DSTL, AVIA 37/1257, 11 Dec 2008

THIS PAGE IS UNCLASSIFIED

1309

CONFIDENTIAL
DISCREET

E.R.D.E. 15/M/62

COPY NO. 11

AD 334879

Decl OADR

MINISTRY OF AVIATION

EXPLOSIVES RESEARCH & DEVELOPMENT ESTABLISHMENT

TECHNICAL MEMORANDUM No. 15/M/62

PICATINNY ARSENAL
TECHNICAL INFORMATION SECTION

The Stability of Colloidal Propellants: Part 5: The Rates of Heat Generation and Critical Charge Sizes for a Composite Modified Cast Double-Base Propellant

Forwarded by:
US ARMY STANDARDIZATION GROUP
UNITED KINGDOM
USN 100 FPO, New York, N.Y.

C.P. Conduit

1. THIS INFORMATION IS DISCLOSED ONLY FOR OFFICIAL USE BY THE RECIPIENT GOVERNMENT AND SUCH OF ITS CONTRACTORS, UNDER SEAL OF SECRECY, AS MAY BE ENGAGED ON A DEFENCE PROJECT. DISCLOSURE TO ANY OTHER GOVERNMENT OR RELEASE TO THE PRESS OR IN ANY OTHER WAY WOULD BE A BREACH OF THESE CONDITIONS.

2. THE INFORMATION SHOULD BE SAFEGUARDED UNDER RULES DESIGNED TO GIVE THE SAME STANDARD OF SECURITY AS THAT MAINTAINED BY HER MAJESTY'S GOVERNMENT IN THE UNITED KINGDOM.

3. THE RECIPIENT IS WARNED THAT INFORMATION CONTAINED IN THIS DOCUMENT MAY BE SUBJECT TO PRIVATELY-OWNED RIGHTS.

THIS DOCUMENT IS THE PROPERTY OF H.B.M. GOVERNMENT AND ATTENTION IS CALLED TO THE PENALTIES ATTACHING TO ANY INFRINGEMENT OF THE OFFICIAL SECRETS ACTS

It is intended for the use of the recipient only, and for communication to such officers under him as may require to be acquainted with its contents in the course of their duties. The officers exercising this power of communication are responsible that such information is imparted with due caution and reserve. Any person other than the authorised holder, upon obtaining possession of this document, by finding or otherwise, should forward it together with his name and address in a closed envelope to:-

THE SECRETARY, MINISTRY OF AVIATION, ADELPHI, LONDON, W.C.2.

Letter postage need not be prepaid, other postage will be refunded. All persons are hereby warned that the unauthorised retention or destruction of this document is an offence against the official Secrets Acts.

INV 90

20080731 008

C98660 (11)

CONFIDENTIAL
DISCREET

Waltham Abbey,
Essex.

Ry 18244

AD-334879

MINISTRY OF AVIATION

EXPLOSIVES RESEARCH AND DEVELOPMENT ESTABLISHMENT

TECHNICAL MEMORANDUM NO. 15/M/62

The Stability of Colloidal Propellants: Part 5: The Rates of Heat Generation and Critical Charge Sizes for a Composite Modified Cast Double-base Propellant

by

C.P. Conduit

Approved: R L Williams

R.L. WILLIAMS
S.A.S.

Approved for Circulation: C. H. Johnson

C.H. JOHNSON
DIRECTOR

5th September, 1962.

WALTHAM ABBEY
ESSEX

CONTENTS

		Page No.
1.	Summary	1
2.	Introduction	1
3.	Experimental	
3.1	Theoretical Principles	3
3.2	The Calorimeter	4
3.3	Calibration	5
3.4	Measurements of Heat Generation in Propellants	5
4.	Results	5
5.	Calculation of Critical Charge Radii: Conclusions	7
6.	Bibliography	9
	Figures 1 - 5	

Reference: WAC/139/013

1. SUMMARY

The isothermal microcalorimeter described by Stott (8) has been constructed and used to measure the rate of heat generation in a sample of composite modified, cast double-base propellant between 70° and 80°C. The results are used to calculate critical charge radii for the spontaneous self-ignition of this composition.

2. INTRODUCTION

The hazards associated with the storage and manufacture of propellants consist of their liability to undergo spontaneous self-heating to ignition. In the case of gun propellants in the form of relatively small grains and in which the total quantity of material in a single container is also small, the risk of ignition in storage is minute, and actual incidents of this kind are made extremely rare by the well established surveillance procedures. Whilst fires do occur occasionally during the manufacture of gun propellants, these are usually associated with specific operations such as pressing or rolling in which the material is subjected to considerable mechanical stresses, so that such fires are not strictly to be regarded as "spontaneous".

The situation is otherwise for large rocket propellant charges both in manufacture and in storage. Here, double-base compositions made by the casting process are usually subjected to a curing procedure carried out by heating to 60°C for a number of days. Under these conditions some decomposition of the propellant is to be expected and, if this is sufficiently exothermal, may give rise to significant self-heating which may lead to ignition of the charge. Similarly, the normal storage of rocket motor charges may cause a similar hazard particularly since the periodic surveillance of such stores is much less easy than for gun propellants.

The problem of determining the liability to self-ignition of materials capable of decomposing exothermally has been tackled theoretically by a number of workers. Qualitatively, if the heat produced by decomposition can be conducted away faster than it is generated, an equilibrium state is set up and no ignition occurs, but, if heat dissipation is less than generation, the temperature of the mass must increase continuously with a consequent acceleration of the decomposition reactions and ultimate ignition of the system. The thermal balance is determined for a given substance by its geometry, and the problem reduces to solving the heat conduction equations to determine the maximum size for which a steady state is just possible.

The mathematical treatment of the effect was first given by Frank-Kamenetsky (1) for the case of a semi-infinite slab of propellant, and it has been extended to the infinite solid cylinder and to the sphere by Chambré (2), whilst Enig (3) has presented a solution applicable to the hollow cylinder. The latter geometry most closely approaches that of a rocket motor charge. Since an adequate review

/and .....

and exposition of the treatment is available (4) it will not be repeated here in full. All that is required for the present purpose is a statement of the basic postulates together with the final solution for the critical conditions for ignition.

For a solid cylinder of propellant of radius b the heat generated per unit mass at any point is given by

$$\frac{dH}{dt} = A \exp\left(\frac{-E}{RT}\right). \qquad \ldots\ldots \underline{1}$$

E = energy of activation for the heat generation reaction and

A = Arrhenius factor in units of cal/g.sec.

The general heat conduction equation is:

$$\rho c \frac{dT}{dt} - K \nabla^2 T = \rho A \exp\left(\frac{-E}{RT}\right) \qquad \ldots\ldots \underline{2}$$

where ρ = density, c = specific heat, and K = thermal conductivity.

In 2, the first term on the left hand side represents the self-heating of the mass with time, whilst the second term expresses the heat losses occurring by conduction through the mass to the external surface which is assumed to be held at a constant temperature T_b. For a steady state, $\frac{dT}{dt} = 0$ so that for an infinite cylindrical charge 2 becomes:

$$K\left[\frac{d^2T}{dr^2} + \frac{1}{r}\frac{dT}{dr}\right] + \rho A \exp\left(\frac{-E}{RT}\right) = 0 \qquad \ldots\ldots \underline{3}$$

The maximum radius b for which a solution of 3 is just possible can be shown (4)to be:

$$b^2 = \frac{2K}{\rho A} \cdot \frac{RT_b^2}{E} \exp\left(\frac{E}{RT_b}\right) \qquad \ldots\ldots \underline{4}$$

The numerical evaluation of 4 requires a knowledge of the physical and chemical properties of the propellant. In particular, the activation energy E of the heat-generation reaction is the most important factor since it is involved in the exponential term. Both the Arrhenius factors A and E in 1 may in principle be determined by measuring the rate of heat evolution from a propellant over a range of temperature, but such measurements are, as yet, sparse. Jackson (5) in the period 1920 - 1930 used an isothermal microcalorimeter to measure dH/dt for a wide range of propellants and their ingredients, but

/he .....

he did not investigate systematically the variation with temperature. From the few measurements he did make, Darwell (4) has calculated A and E to be 1.85×10^{17} and 36.2 kcal., respectively, for propellant SC between 80° and 110°C.

More recently Loftus and Gross (6) have developed an adiabatic method to measure the variation of dH/dt with temperature. For three unspecified propellants these workers give A-values ranging from 1.17×10^{11} to 1.56×10^{20} and E-values varying from 28.6 to 49.3 kcal/mole at an average temperature of the order of 190°C. This technique is relatively insensitive and can detect self-heating only at temperatures not far below the ignition point and considerably higher than those encountered during manufacture or storage. The results obtained may therefore not be relevant to practical problems. This view is supported by some Dutch work using a similar experimental technique (7).

In general, the rates of heat generation in propellants in the realistic temperature range of 20° - 100°C are very low, and their experimental determination is difficult. A review of available methods suggested that the type of isothermal microcalorimeter described by Stott (8) might be suitable for the purpose. It was designed to measure the rate of heat evolution from coal undergoing slow oxidation at ordinary temperatures. The following is an account of the construction and behaviour of such a calorimeter when applied to the evaluation of the self-heating parameters of a sample of composite modified, cast double-base propellant. This material was chosen for study because it is known from other work (9) that it shows an unusually large tendency to self-ignition in the standard 80°C Silvered Vessel test. The results obtained have been used in equation 4 above to calculate critical charge radii for various storage temperatures.

3. EXPERIMENTAL

3.1 Theoretical Prinoiples

In the calorimeter described by Stott (loc. cit.), the heat generated by a reacting solid is made to flow down a large number of thermocouples embedded in the sample to be dissipated in a constant temperature heat sink in contact with the cold junctions. The couples are connected in series with one another and with a sensitive galvanometer. For a constant rate of heat generation a steady state is eventually established when it can be shown that the galvanometer deflection is proportional to the rate of heat generation in the sample. For a galvanometer of a given resistance and sensitivity Stott shows how to calculate the number of couples required to give maximum sensitivity to heat flow. The sensitivity S, defined as the deflection produced by unit flow of heat, is given by:

$$S = \frac{D}{Q} = nCG(R_g)^{\frac{1}{2}} \Big/ \left\{ H\left[R_g + \frac{n^2}{H}(k_1 + zk_2)(r_1 + r_2/z)\right]\right\} \quad \ldots\ldots \quad 5$$

/where .....

where:

n = number of couples; C = thermal e.m.f. per deg C; G = galvanometer constant; R_g = galvanometer resistance; k_1 and k_2 = thermal conductivity of the couple wires; r_1 and r_2 = specific resistance of the wires; z = ratio of the diameters of the wires; H is the heat transfer coefficient of the thermocouple system defined by

$$H = \frac{na}{l}(k_1 + zk_2)$$

in which a and l are the cross-sectional area and length of one of the wires of the couple. Stott's instrument contained 100 copper/constantan couples of 40 s.w.g., and with the particular galvanometer used had a calculated sensitivity of 10 mm/cal.hr. In practice not all the heat generated flows down the couple wires to the sink, some being lost in other ways, so that an actual sensitivity of only 2.5 mm/cal.hr. was observed, corresponding to an efficiency of 25 per cent.

3.2 The Calorimeter

The present calorimeter was designed for a Tinsley Type 4789 moving coil galvanometer of resistance 16 ohms and a sensitivity of 1500 mm/microamp. One hundred chromel/alumel (T1/T2) thermocouples of 30 s.w.g. were used, the length between the hot and cold junction being about 1 cm. This gave a heat transfer coefficient H of 1.23×10^{-2} cal/sec.deg C, and a calculated sensitivity of 4.56×10^{3} mm/cal.hr.

The construction is shown in Fig. 1. The sample holder consists of a cylindrical vacuum-jacketted glass tube (A) 10 cm. in length by 2 cm. internal diameter. The thermocouples were formed into two sets of 50 (B) to be inserted one into each end of the sample tube. The cold junctions were fixed with shellac to the face of a brass block (C) provided with a broad flange. The whole was clamped together by the rods (E), and liquid tightness was ensured by synthetic rubber rings (D). The two sets of thermocouples were connected in series and the leads to the galvanometer emerged through the tubes (F).

The thermocouple units were constructed as shown in Fig. 2. The required number of pieces of T1 and T2 wire were clamped in a jig and the junctions formed by twisting the ends together using a pin vice. After cutting to equal lengths of 3 cm. for the hot and 0.5 cm. for the cold, the junctions were silver soldered, and the whole assembly removed from the jig. A strip of asbestos paper (A) was stuck to each side as shown, and the element was then rolled up into a tight spiral to give the required cylindrical form. As mentioned above, the cold junctions were fixed to the brass blocks (C) in Fig. 1 using shellac, with a thin disc of mica paper interposed. A compromise was necessary here since the junctions require to be in good thermal contact with the heat sink but must be insulated electrically from it.

/After .....

After filling with the sample, the calorimeter was clamped together and placed inside a large Dewar vessel filled with water and closed by a thick rubber bung through which the tubes F projected. The whole was immersed in a water bath whose temperature was controlled to ±0.01 deg.C. To hasten the attainment of thermal equilibrium inside the Dewar vessel, water from the main bath was circulated through it by an external pump, which was turned off when the temperatures became equal.

3.3 Calibration

Since the theoretical sensitivity to heat flow of 4.56×10^3 mm/cal.hr. was unlikely to be achieved in practice, the calorimeter was calibrated electrically. A small coil of nichrome wire of resistance 4.00 ohms was placed in the space (G) (Fig. 1), and connected to an external circuit containing a battery, a milliameter and a variable resistance. The deflection of the galvanometer connected to the thermocouple elements was measured at a number of different power inputs to the heating coil. In general about 15 - 20 minutes were required for a steady state to be reached within the calorimeter. The results are plotted in Fig. 3 as the deflection in mm. against the power dissipation in calories/hour, and lie on a good straight line. The line does not pass quite through the origin suggesting that a small parasitic e.m.f. is present in the thermocouple circuit. The slope of the least squares straight line through these points gives a sensitivity of 1754 mm/cal.hr., so that the calorimeter has an efficiency of about 40 per cent.

3.4 Measurements of Heat Generation in Propellants

In spite of all precautions it was found that the galvanometer tended to oscillate with time, sometimes over a range of 20 - 30 mm., with the calorimeter empty. This effect was due to the cyclic temperature variations of the thermostat bath being communicated, with reduced amplitude, through the Dewar vessel to the brass blocks forming the cold-junction heat sinks. The measurements were therefore made on a statistical basis. First, a series of some 40 - 60 readings of the galvanometer were made with the calorimeter filled with an inert reference material consisting of coarse dried sand. The mean deflection and 95 per cent confidence limits were calculated. This was then repeated with the propellant sample. The latter was ground to 36 mesh and weighed into the calorimeter which held 6.5 g. The new mean deflection of the galvanometer and its deviation from that of the blank experiment were obtained and the latter used with the calibration curve to find the rate of heat generation. Usually, 12 hours were required to establish thermal equilibrium and the readings were continued for several days.

4. RESULTS

Measurements of the rate of heat generation were carried out on a sample of propellant CPA.2831 with the following composition:

/Nitrocellulose .....

Nitrocellulose (12.6%N)	27.8	per cent
Nitroglycerine	32.4	"
Triacetin	7.5	"
Ammonium perchlorate	31.1	"
2-nitrodiphenylamine	1.2	"
Graphite glaze	0.03	" (added)

Measurements were begun at 50°C, but there was no detectable heat evolution at this temperature, and it was found that 70°C was the lowest temperature that could be used to provide a measurable result. Accordingly, the rates of heat generation were measured at 2.5 deg.C intervals from 70° to 80°C, and the results are given in Table 1, and are plotted in Fig. 4 which shows the 95 per cent confidence limits for each point.

TABLE 1

Temperature, °C	Heat Evolution, cal/g.sec.
70.0	1.61×10^{-7}
72.5	3.42×10^{-7}
75.0	9.83×10^{-7}
77.5	2.57×10^{-6}
80.0	7.83×10^{-6}

The rate of heat generation rises steeply with increasing temperature, and when plotted in the usual Arrhenius form as ln(dH/dt) against 1/T a reasonably good straight line is obtained (Fig. 5). By the least squares treatment this plot gives the following results for the kinetic parameters in equation 1:

$$E = 9.40 \times 10^{4} \text{ cal/mole/mol}$$

$$A = 9.70 \times 10^{52} \text{ cal/g.sec.}$$

This value of 94 kcal/mole for the energy of activation of the heat generation process in this composition is considerably higher than is found for propellants in general: the values usually lie between 30 and 50 kcal/mole. It is, however, not inconsistent with the behaviour of colloidal propellants containing ammonium perchlorate. These

/compositions .....

compositions have short lives compared with conventional propellants, and when subjected to the Silvered Vessel test at 80°C tend to ignite very soon after the initial onset of self-heating, which suggests that the decomposition reactions have an abnormally large temperature coefficient. However, it must be borne in mind that owing to the limited temperature range over which the measurements were carried out, E is rather sensitive to experimental error. In view of the long extrapolation involved any such error in E results in a disproportionately large change in the value of the pre-exponential factor A.

5. CALCULATION OF CRITICAL CHARGE RADII: CONCLUSIONS

The above values of A and E were used to calculate the critical radii for spontaneous self-ignition of composition CPA 2831: the critical radius is given by:

$$b^2 = \frac{2K}{\rho A} \cdot \frac{RT_b^2}{E} \cdot \exp\left(\frac{E}{RT_b}\right). \qquad \ldots\ldots \quad 4$$

$E = 9.40 \times 10^4$ cal/mole

$A = 9.70 \times 10^{52}$ cal/g.sec.

$\rho = 1.670$ g/ml.

$K = 4.85 \times 10^{-4}$ cal.sec.$^{-1}$ cm.$^{-1}$ deg.$^{-1}$

$R = 1.987$ cal/mole

Table 2 (p. 8) gives the calculated values of b for various values of the storage temperature T_b.

The fourth column of the tables gives the results calculated by Darwell (4) using Jackson's (5) thermal data for propellant SC.

It is seen that at 80°C the critical radii are approximately the same for the two compositions but owing to the larger temperature coefficient of reaction for CPA 2831 its critical radii increase much more rapidly at lower temperatures and decrease more rapidly at higher temperatures. This, of course, assumes that the kinetic parameters are valid over the range of temperature considered in Table 2.

The above results apply to a solid cylindrical charge of infinite length. For a hollow finite cylinder the critical radii would be appreciably larger at each temperature. At the normal charge curing temperatures of around 60°C, the critical size is about 10 metres radius which would seem to give a very adequate margin of safety for the charges at present in use or envisaged.

/TABLE 2 .....

TABLE 2

T_b, °K	θ_b, °C	b, cm.	
		CPA 2831	SC
293	20	1.32×10^7	-
303	30	9.50×10^5	-
313	40	8.17×10^4	6.26×10^2
323	50	8.10×10^3	2.62×10^2
333	60	9.23×10^2	1.16×10^2
343	70	1.21×10^2	53.8
353	80	17.6	26.1
363	90	2.84	13.2
373	100	0.51	6.91
383	110	0.10	3.75
393	120	2.13×10^{-2}	2.10
403	130	4.90×10^{-3}	1.21
413	140	1.22×10^{-3}	-
423	150	3.21×10^{-4}	-

It should be pointed out that the theoretical treatments, on which critical size calculations are based, contain the assumption that the chemical decomposition reactions occurring at a given temperature do not change in rate or character with time. This is unlikely to be true, since the accumulation of decomposition products generally exerts a positive catalytic influence on the rate of the primary reactions. It follows therefore that a charge which is below the critical size for a particular environment may pass over to a non-steady thermal condition after long times of storage when extensive deterioration has taken place, and it is clear that some form of chemical surveillance of such a charge is still necessary as a final assurance against ignition hazards.

In conclusion, it is clear that further work is required to develop yet more sensitive and accurate techniques for the measurement of the rates of heat generation at temperatures still nearer to those of actual storage.

/6. .....

6. BIBLIOGRAPHY

1. D.A. Frank-Kamenetsky, Acta Physicochim. U.R.S.S., 1939, 10, 365.

2. P.L. Chambré, J. Chem. Phys., 1952, 20, 1795.

3. J.W. Enig. NAVORD Report 4267, 1956.

4. H.M. Darwell, I.M.I. (Kynoch) Ltd., Summerfield Technical Note B.D.24, 1958.

5. C.G. Jackson, A.R.D. Explosives Report 670/44.

6. J.J. Loftus and D. Gross, NBS Report 6111, 1958.

7. J.L.C. van Geel, Anglo-Dutch Interdependence Working Party, June 1962.

8. J.B. Stott, J. Sci. Instr., 1956, 33, 58.

9. G.C. Bromberger, H.R. Broomhall, C.P. Conduit and A.J. Howard, E.R.D.E. Report No. 7/R/60.

809/62/BD

CONFIDENTIAL/DISCREET

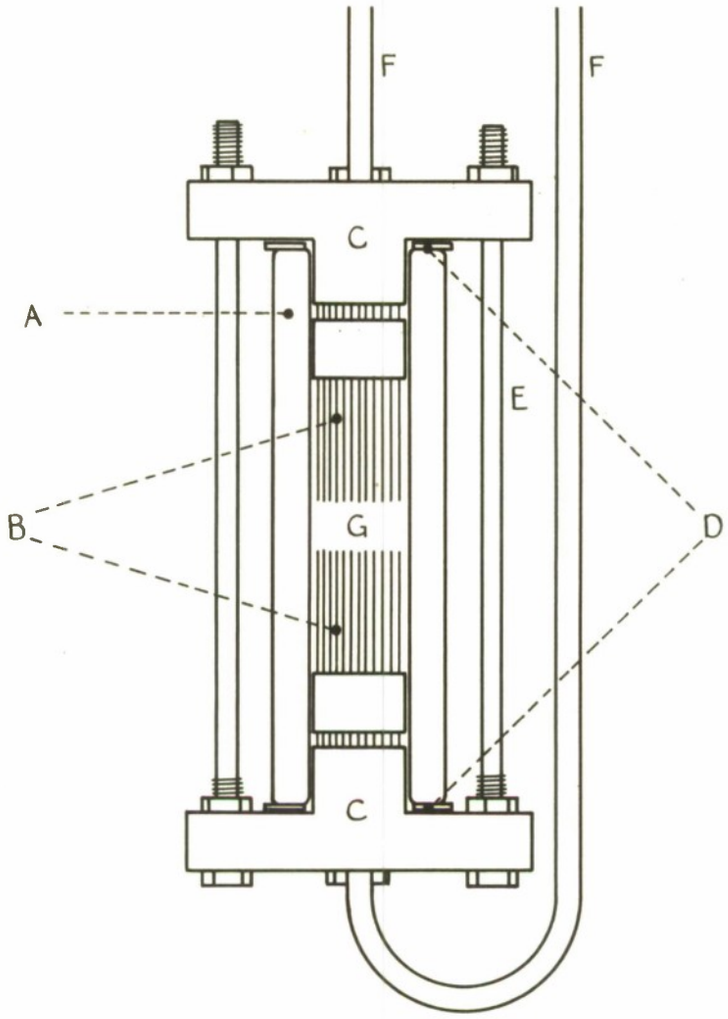

FIG. 1.

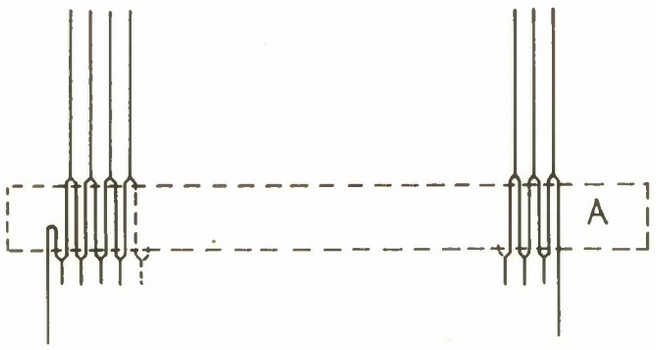

FIG. 2

CONFIDENTIAL/DISCREET

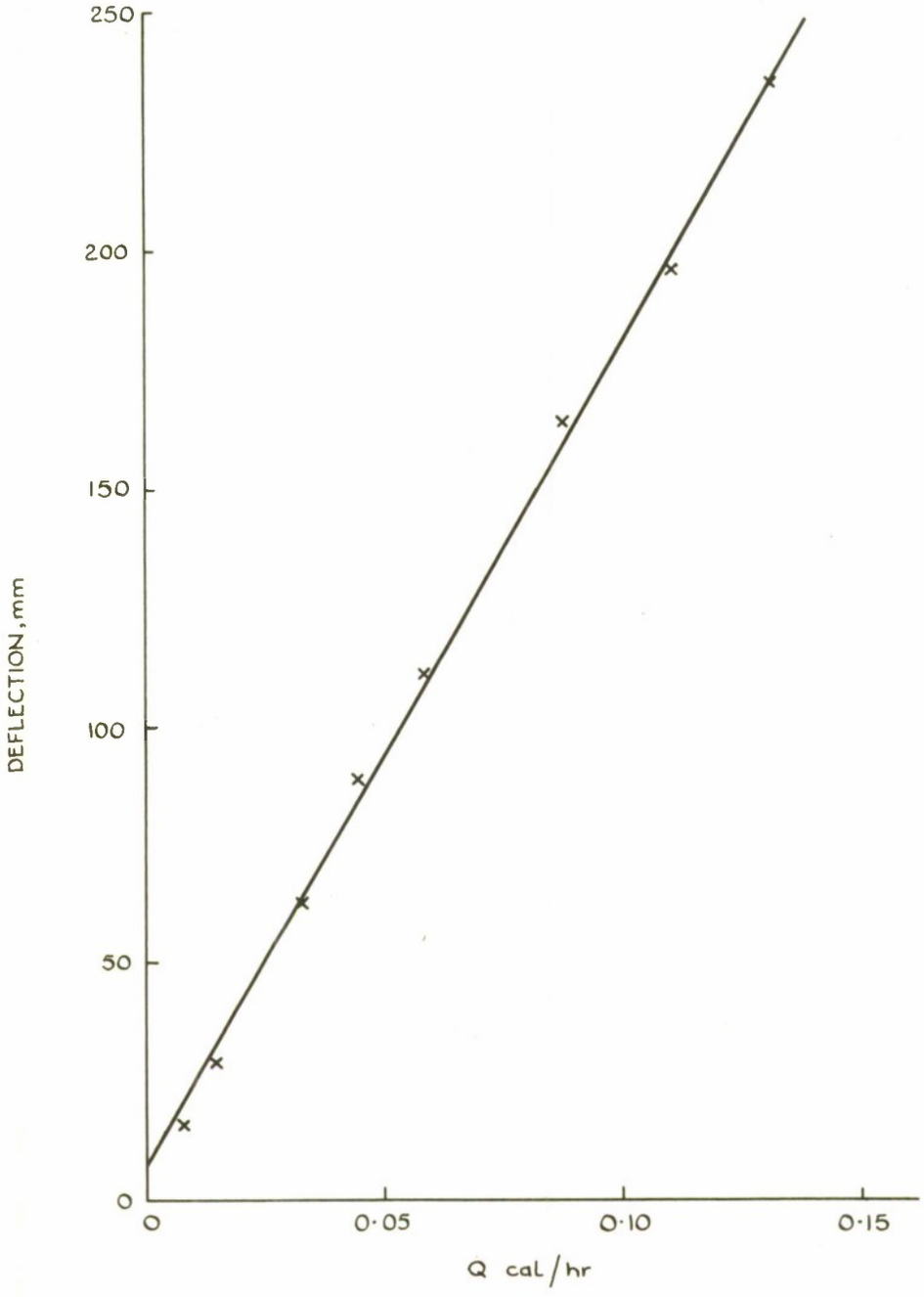

FIG. 3

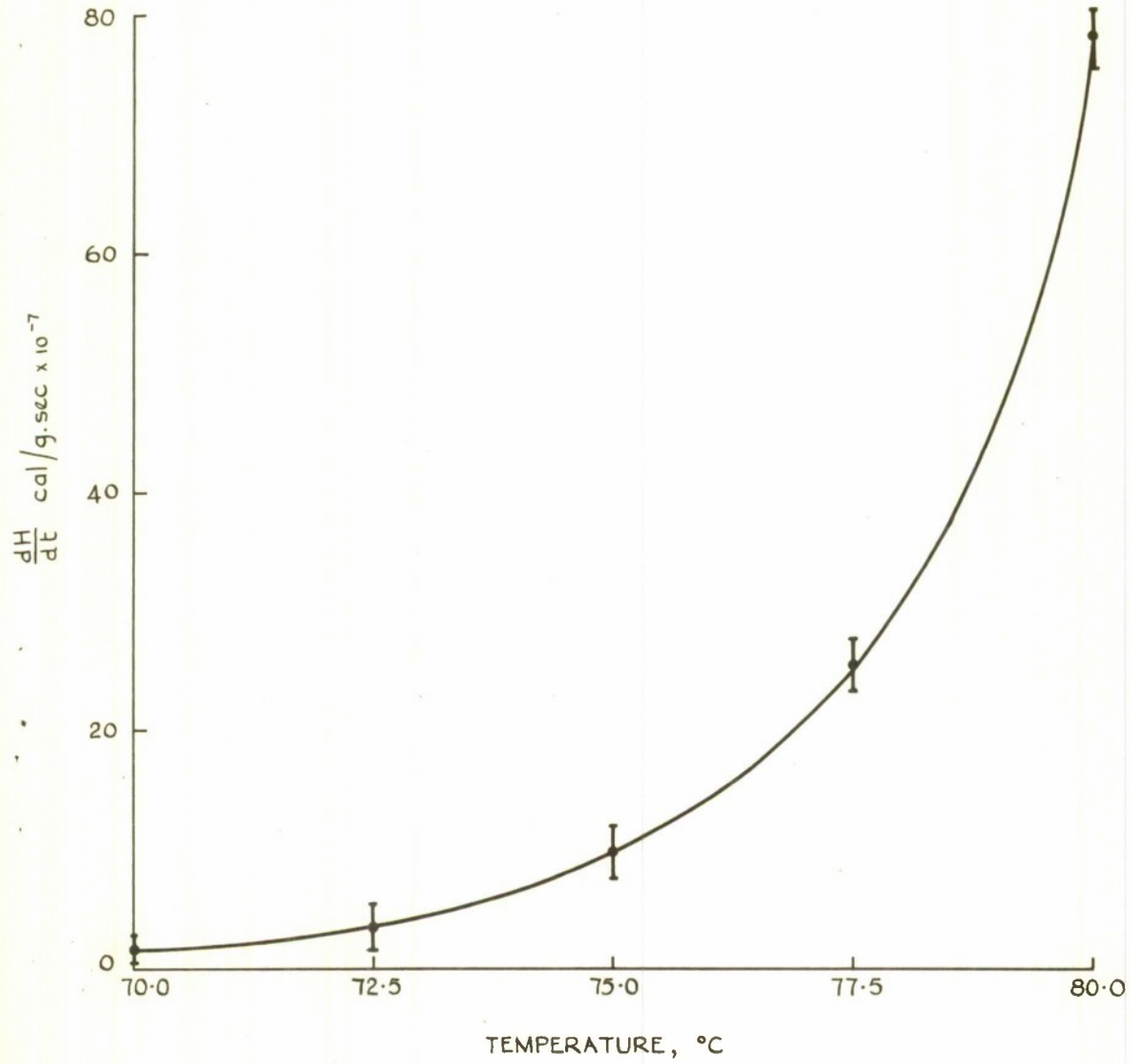
80
60
40
20
0
$\frac{dH}{dt}$ cal/g.sec x 10^{-7}
70·0
72·5
75·0
77·5
80·0
TEMPERATURE, °C

FIG. 4

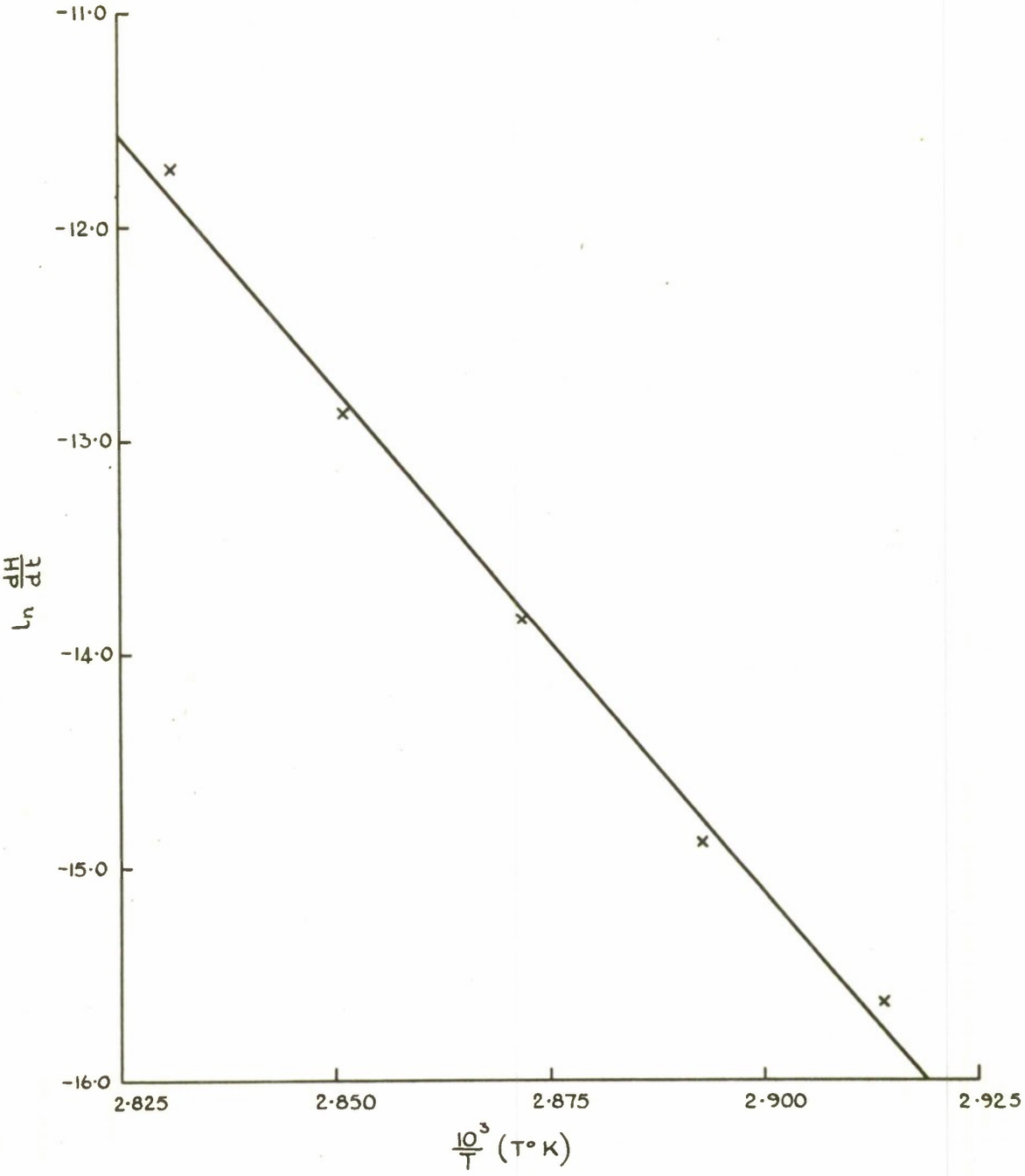
-11·0
-12·0
-13·0
-14·0
-15·0
-16·0
Ln dH/dt
2·825
2·850
2·875
2·900
2·925
10³/T (T° K)

FIG. 5

CONFIDENTIAL/DISCREET

E.R.D.E. Technical Memorandum No. 15/M/62

The Stability of Colloidal Propellants: Part 5: The Rates of Heat Generation and Critical Charge Sizes for a Composite Modified Cast Double-base Propellant

C.P. Conduit

December, 1962

The isothermal microcalorimeter described by Stott (8) has been constructed and used to measure the rate of heat generation in a sample of composite modified, cast double-base propellant between 70° and 80°C. The results are used to calculate critical charge radii for the spontaneous self-ignition of this composition.

9 pp., 5 fig., 2 tables.

CONFIDENTIAL/DISCREET

CONFIDENTIAL/DISCREET

E.R.D.E. Technical Memorandum No. 15/M/62

The Stability of Colloidal Propellants: Part 5: The Rates of Heat Generation and Critical Charge Sizes for a Composite Modified Cast Double-base Propellant

C.P. Conduit

December, 1962

The isothermal microcalorimeter described by Stott (8) has been constructed and used to measure the rate of heat generation in a sample of composite modified, cast double-base propellant between 70° and 80°C. The results are used to calculate critical charge radii for the spontaneous self-ignition of this composition.

9 pp., 5 fig., 2 tables.

CONFIDENTIAL/DISCREET

AUG 28 1974

CONFIDENTIAL
DISCREET

CONFIDENTIAL
DISCREET

[dstl]

Information Centre
Knowledge Services
[dstl] *Porton Down*
Salisbury
Wilts
SP4 0JQ
22060-6218
Tel: 01980-613753
Fax 01980-613970

Defense Technical Information Center (DTIC)
8725 John J. Kingman Road, Suit 0944
Fort Belvoir, VA 22060-6218
U.S.A.

AD#: AD334879

Date of Search: 11 December 2008

Record Summary: AVIA 37/1257
Title: Stability of colloidal propellants: pt 5, rates of heat generation and critical charge sizes for composite modified cast double-base propellant
Availability Open Document, Open Description, Normal Closure before FOI Act: 30 years
Former reference (Department) ERDE 15/M/62
Held by The National Archives, Kew

This document is now available at the National Archives, Kew, Surrey, United Kingdom.

DTIC has checked the National Archives Catalogue website (http://www.nationalarchives.gov.uk) and found the document is available and releasable to the public.

Access to UK public records is governed by statute, namely the Public Records Act, 1958, and the Public Records Act, 1967.
The document has been released under the 30 year rule.
(The vast majority of records selected for permanent preservation are made available to the public when they are 30 years old. This is commonly referred to as the 30 year rule and was established by the Public Records Act of 1967).

This document may be treated as UNLIMITED.